修改标记	区域	修改内容	修改人	日期

高速手持风扇

H11使用说明书

安全指引

1.本产品不得由存在肢体、感官或精神能力缺陷或缺少使用经验和知识的人(包括儿童)使用,除非有负责他们安全的人对他们进行与本产品使用有关的监督或指导;
2.在使用本产品时应照看好儿童,确保他们不玩耍本产品。
3.本产品应仅使用标记在机身上的安全特低电压供电.
4.本产品包含只能由技术人员更换的电池。
5.本产品说明书电子档，官方下载网站：https://www.greatarmo.com

产品参数

产品名称	高速手持风扇
产品型号	H11
充电输入	5V⎓1.6A
电池电压	3.7V
产品尺寸	180.5*62*59mm
执行标准	GB/T 4706.1-2024 ,GB/T 4706.27-2024

使用前请仔细阅读说明书，并保管好说明书

产品结构

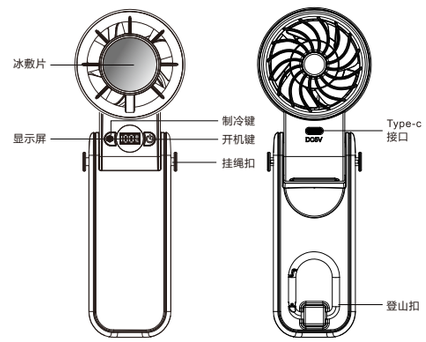

登山扣说明

使用说明：用手指捏住弹簧扣锁扣，将绳带穿入登山扣内环，松开卡扣，弹簧自动回弹闭合，确认扣口完全密封、无缝隙即可正常使用。
注意事项：
1.禁止用于高空攀岩、绳索承重、人身防护等专业极限承重用途，仅作日常挂本产品使用；
2.避免超负荷承重，请勿悬挂超出产品额定承重的重物；
3.切勿强行暴力掰扯、摔砸、弯折登山扣，防止变形、断裂；
4.使用前检查扣口弹簧是否回弹顺畅、有无裂纹变形，异常请勿使用；

使用说明

本产品共有二个版本：A标准版，B制冷版

% 电量百分比
❄ 冰敷模式指示灯

☐ 标准版：

1.单击+键开启风扇，继续连续单击+键，档位依次为：01-25-50-75-100-关机，长按+键风速依次由01档，单档递增到100档，无极循环。连续单击 - 键档位依次为：100-75-50-25-01-关机，长按 - 键风速依次由100档，单档递递减到01档，无极循环。
2.电量低于10%时，显示屏闪烁提醒，请及时进行充电。
3.充电：插入充电线后，电量百分比个位数闪烁，显示实时电量，电池充满后显示屏显示100%。

☐ 制冷版：

1.单击⏻键开启风扇，再单击关闭风扇。开机状态下1.5秒内双击❄键制冷模式开启，再次双击制冷键模式关闭。
2.开机状态下连续单击❄键档位依次为：01-25-50-75-100档，连续单击制冷键档位依次为：100-75-50-25-01档，无极循环，在连续单击过程中单击速度要慢一点，以免直接切换到制冷模式。
3.开机状态下长按❄键风速档位由01档到100单档位递增，再长按❄键风速档位由100档到01单档位递减，无极循环。
4.电量低于10%时，显示屏闪烁提醒，请及时进行充电。
5.充电：插入充电线后，电量百分比个位数闪烁，显示实时电量，电池充满后显示屏显示100%。
6.充电过程中不能开启冰敷模式。

配件加挂绳

彩盒一套　说明书一张　数据线一条　挂绳一条　产品一台

警告

◆本产品内置密封电池，无法自行拆卸。
◆请勿在潮湿环境中（如浴室）使用本产品，接触水可能会导致产品故障或损坏。
◆请勿敲击或摔打本产品，反复敲击可能会导致内部损坏
◆请勿自行拆卸、更改或者修理本产品。
◆请勿将产品投入火中，以免发生爆炸危险。
◆若产品在充电过程中出现异常高温或变形，请立即停止充电并联系售后服务中心处理。
◆请勿让7岁以下儿童单独使用本产品。

产品合格证

产品名称：　高速手持风扇

产品编号：

产品型号：　H11

生产日期：

检验员：　01

High Speed Handheld Fan

H11 User manual

Safety Instructions

1.This product must not be used by persons with physical, sensory or mental impairments, or by those lacking experience and knowledge (including children), unless they are supervised or instructed by a person responsible for their safety in relation to the use of this product.
2.Children shall be supervised when this product is in use to ensure they do not play with it.
3.This product shall be powered only by the safety extra-low voltage (SELV) marked on the unit.
4.This product contains batteries that can only be replaced by a qualified technician.
5.Electronic version of this product manual is available for official download at: https://www.greatarmo.com

Product Specifications

Product Name	High Speed Handheld Fan
Model	H11
Charging Input	5V⎓1.6A
Battery Voltage	3.7V
Product Size	180.5*62*59mm
Compliance Standard	GB/T 4706.1-2024 ,GB/T 4706.27-2024

Read this manual carefully before use and keep it for future reference.

Product Structure

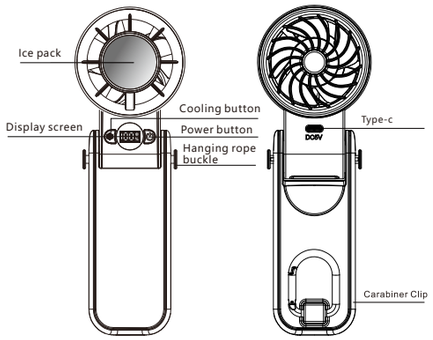

Product Specifications

Instructions:
Pinch the spring latch with your fingers, pass the strap through the inner ring of the carabiner, then release the latch. The spring will automatically rebound and close. Ensure the opening is fully closed with no gaps before normal use.
Precautions:
1.Do not use this product for high-altitude rock climbing, rope load-bearing, personal protection or other professional extreme load-bearing scenarios. It is only for daily hanging use.
2.Avoid overloading. Do not hang heavy objects exceeding the rated load of the product.
3.Do not forcibly pull, drop, strike or bend the carabiner to prevent deformation and fracture.
4.Before use, check whether the spring latch rebounds smoothly and whether there is any crack or deformation. Do not use it if any abnormality is found.

Instructions for Use

This product has two versions in total: A Standard Edition , B Refrigerated version

% Battery Percentage

❄ Ice Pack Mode Indicator

☐ Standard Edition

1.Short press the + button to turn on the fan. Keep short pressing the + button, the speed levels cycle in order: 01-25-50-75-100-Off.Long press the + button, the wind speed increases gradually from level 01 to level 100 one gear at a time with stepless cycle adjustment. Keep short pressing the - button, the speed levels cycle in order: 100-75-50-25-01-Off.Long press the - button, the wind speed decreases gradually from level 100 to level 01 one gear at a time with stepless cycle adjustment.
2.When the battery power is lower than 10%, the display will flash as a reminder. Please charge the device in time.
3.Charging instruction: After connecting the charging cable, the units digit of the battery percentage flashes to display the real-time battery level. The display will show 100% when the battery is fully charged.

☐ Refrigerated version

1.Short press the button to turn on the fan; short press it again to power off. When the fan is running, double-click the button within 1.5 seconds to activate the cooling mode; double-click again to deactivate the cooling mode.
2.When powered on, continuously short press the button to switch speed levels in sequence: 01-25-50-75-100.Continuously short press the cooling key to switch levels in sequence: 100-75-50-25-01.It adopts stepless cyclic adjustment. Please press the button slowly during continuous operation to avoid accidental entry into cooling mode.
3.When powered on, long press the button to increase the wind speed level step by step from level 01 to 100.Long press the button again to decrease the wind speed level step by step from level 100 to 01, realizing stepless cycle.
4.When the remaining battery is lower than 10%, the display screen will flash for reminder. Please charge the product in time.
5.Charging: After connecting the charging cable, the units digit of the battery percentage flashes to display the real-time battery level. The display will show 100% when the battery is fully charged.
6.The ice compress mode cannot be activated while charging.

Product Accessories

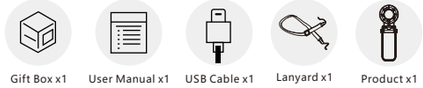

Gift Box x1　User Manual x1　USB Cable x1　Lanyard x1　Product x1

Warnings

◆This product has a built-in sealed battery. Do not disassemble it by yourself.
◆Do not use in humid environments (e.g., bathrooms). Exposure to water may cause malfunction or damage.
◆Avoid impacts or dropping the product. Repeated shocks may damage internal components.
◆Do not disassemble, modify, or repair the product yourself.
◆Do not expose to fire or high heat to prevent explosion risks.
◆If abnormal overheating or deformation occurs during charging, stop use immediately and contact customer service.
◆Do not allow children under 7 years old to use this product unsupervised.

Product Certification

Product Name:　High Speed Handheld Fan

Product ID:

Model:　H11

Production Date:

Quality Inspector:　01

技术要求

1.印刷必须清晰不得有断线、模糊不清等不良现象；
2.背胶必须耐温80摄氏度且不会翘起；
3.标签必须符合“SPI环境管制物质技术标准（SGP-0401)”最新版。
4.公差为±0.1mm。

温馨提示：请印刷供应商严格按照我司设计图纸印刷生产。
如贵司有生产上的原因需要调整图纸的字体、图形、颜色、刀模尺寸、材质工艺等，请必须通知我司相关负责的包装设计师，并在征得包装设计师同意的情况下修改文档并发回存档。

大花猫科技
Greatarmo Technology Co.,Ltd

型号	H11	物料	说明书			颜色	黑白
材质	80g书纸		工艺	单色			
设计		日期	2026年03月05日	尺寸	70×105mm		公差±0.1
审核		日期		单位	mm	页码	1
批准		日期		比例	1:1	版本	V1.0